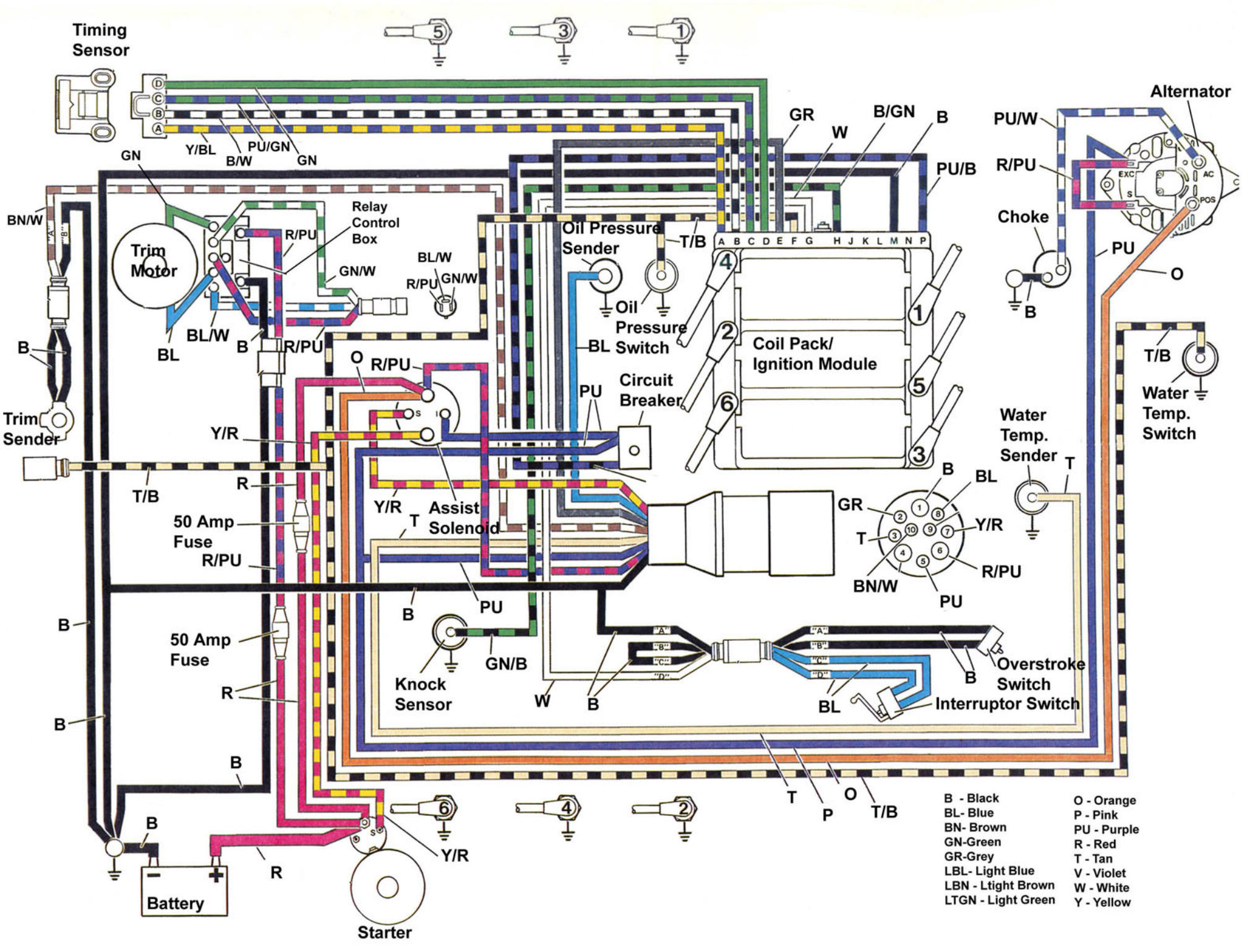
Timing Sensor
Y/BL
B/W
PU/GN
GN
GR
W
B/GN
B
PU/B
Alternator
PU/W
R/PU
EXC
AC
S
POS
Choke
B
PU
O
GN
BN/W
"A"
"B"
Trim Motor
Relay Control Box
R/PU
GN/W
BL/W
R/PU
GN/W
BL
BL/W
B
R/PU
Oil Pressure Sender
T/B
Oil Pressure Switch
BL
A B C D E F G H J K L M N P
Coil Pack/ Ignition Module
1
2
3
4
5
6
Circuit Breaker
PU
O
R/PU
S
I
Y/R
T/B
Water Temp. Switch
Water Temp. Sender
T
Trim Sender
B
T/B
R
Y/R
Assist Solenoid
T
50 Amp Fuse
R/PU
B
BL
GR
Y/R
T
BN/W
R/PU
PU
B
PU
50 Amp Fuse
GN/B
Knock Sensor
W
B
"A"
"B"
"C"
"D"
B
Overstroke Switch
BL
Interruptor Switch
R
B
B
B
T
P
O
T/B
B
Y/R
R
Battery
Starter
B - Black
BL- Blue
BN- Brown
GN-Green
GR-Grey
LBL- Light Blue
LBN - Ltight Brown
LTGN - Light Green
O - Orange
P - Pink
PU - Purple
R - Red
T - Tan
V - Violet
W - White
Y - Yellow